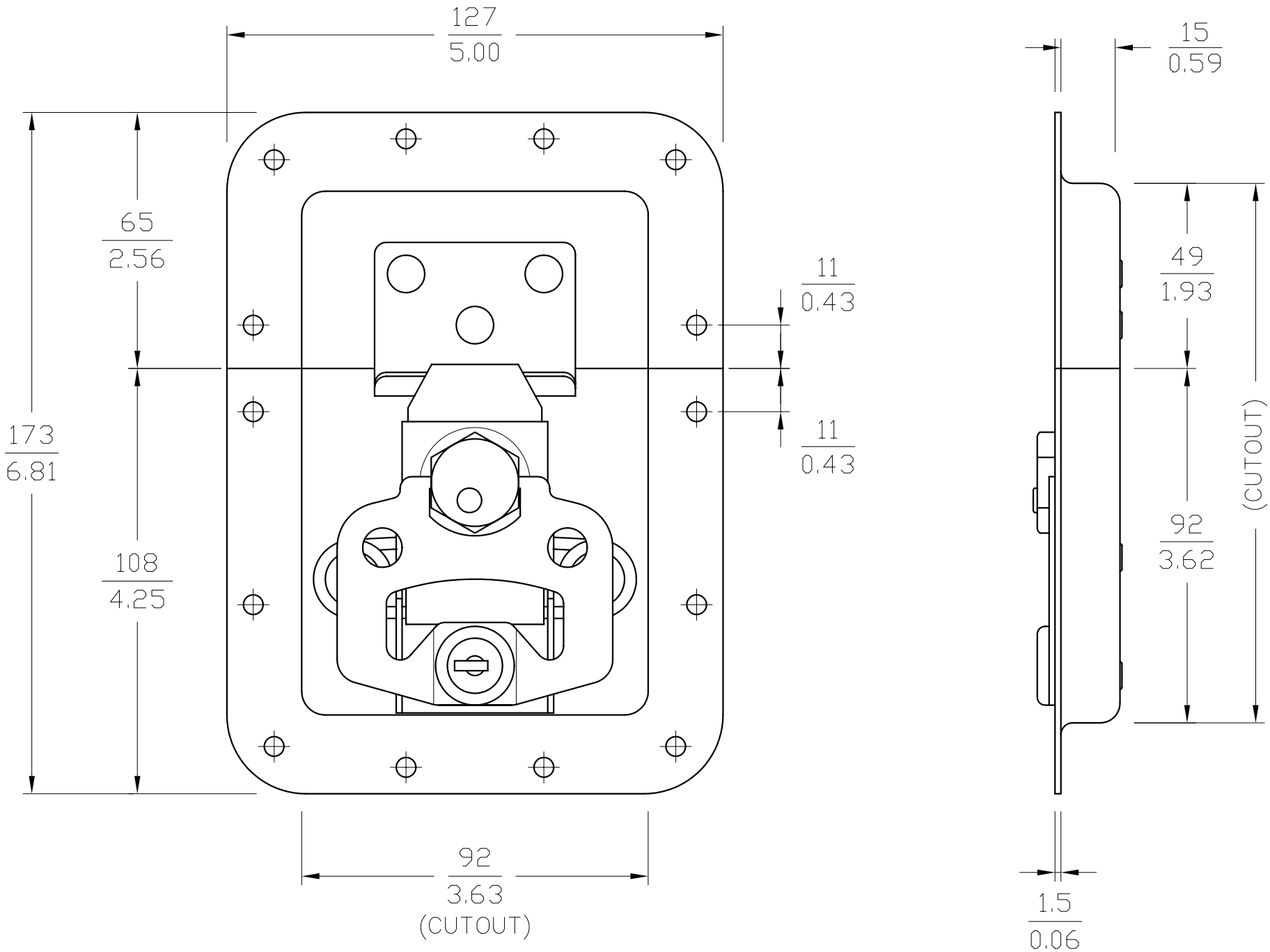

14 mtg holes Ø5.0/0.20