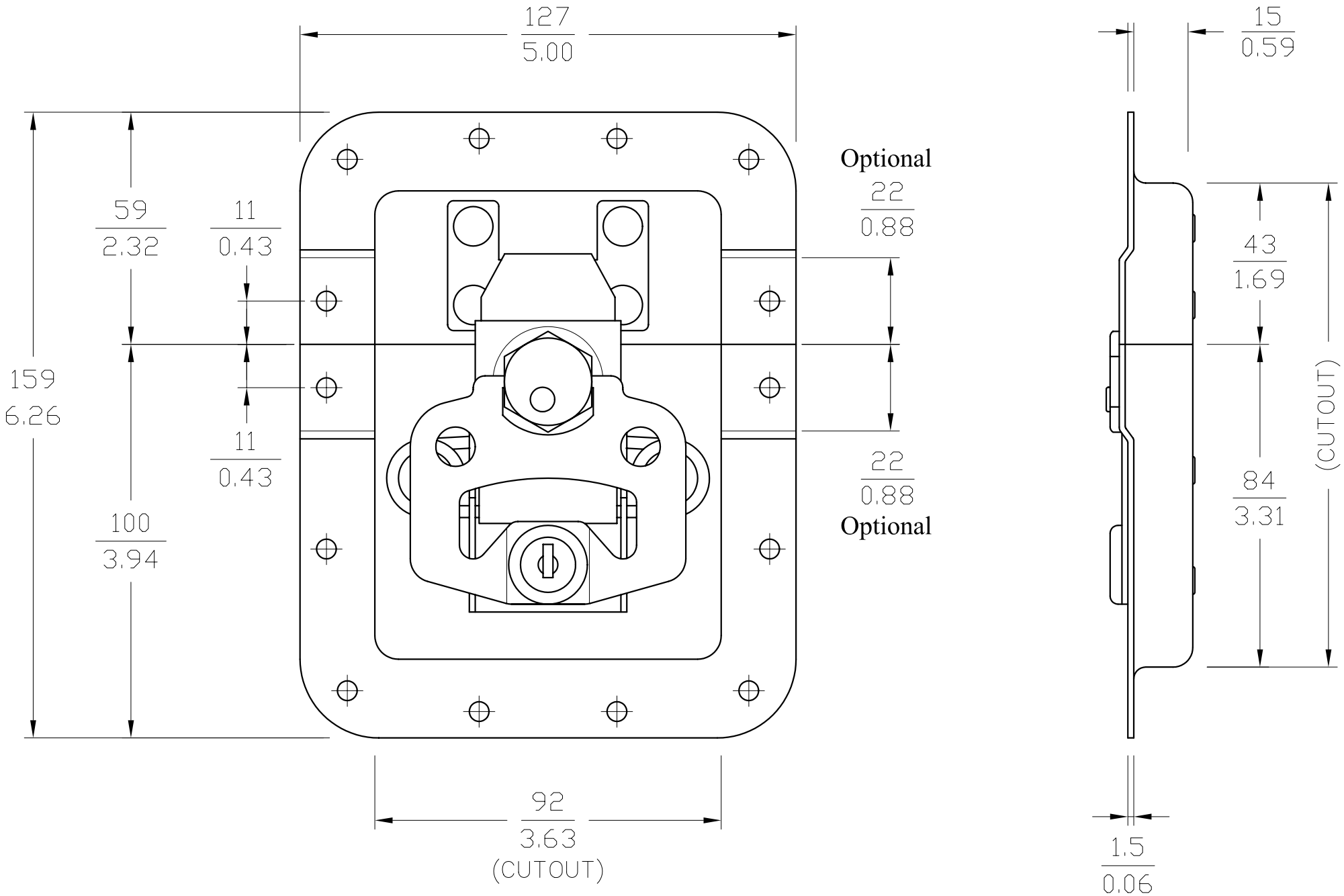

14 mtg holes ⌀5.0/0.20