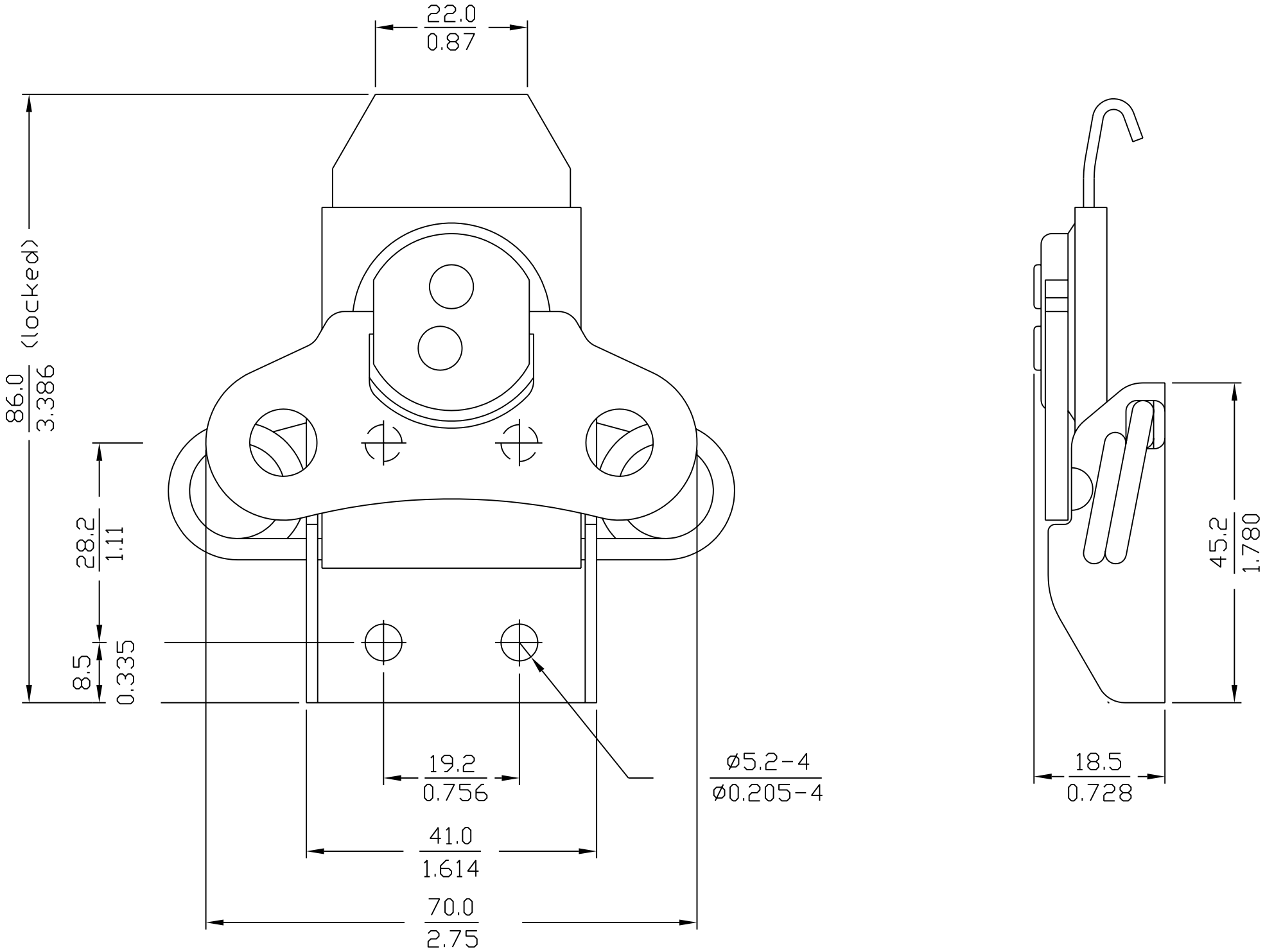
22.0
0.87
86.0
3.386
(locked)
28.2
1.11
8.5
0.335
19.2
0.756
41.0
1.614
70.0
2.75
ø5.2-4
ø0.205-4
45.2
1.780
18.5
0.728