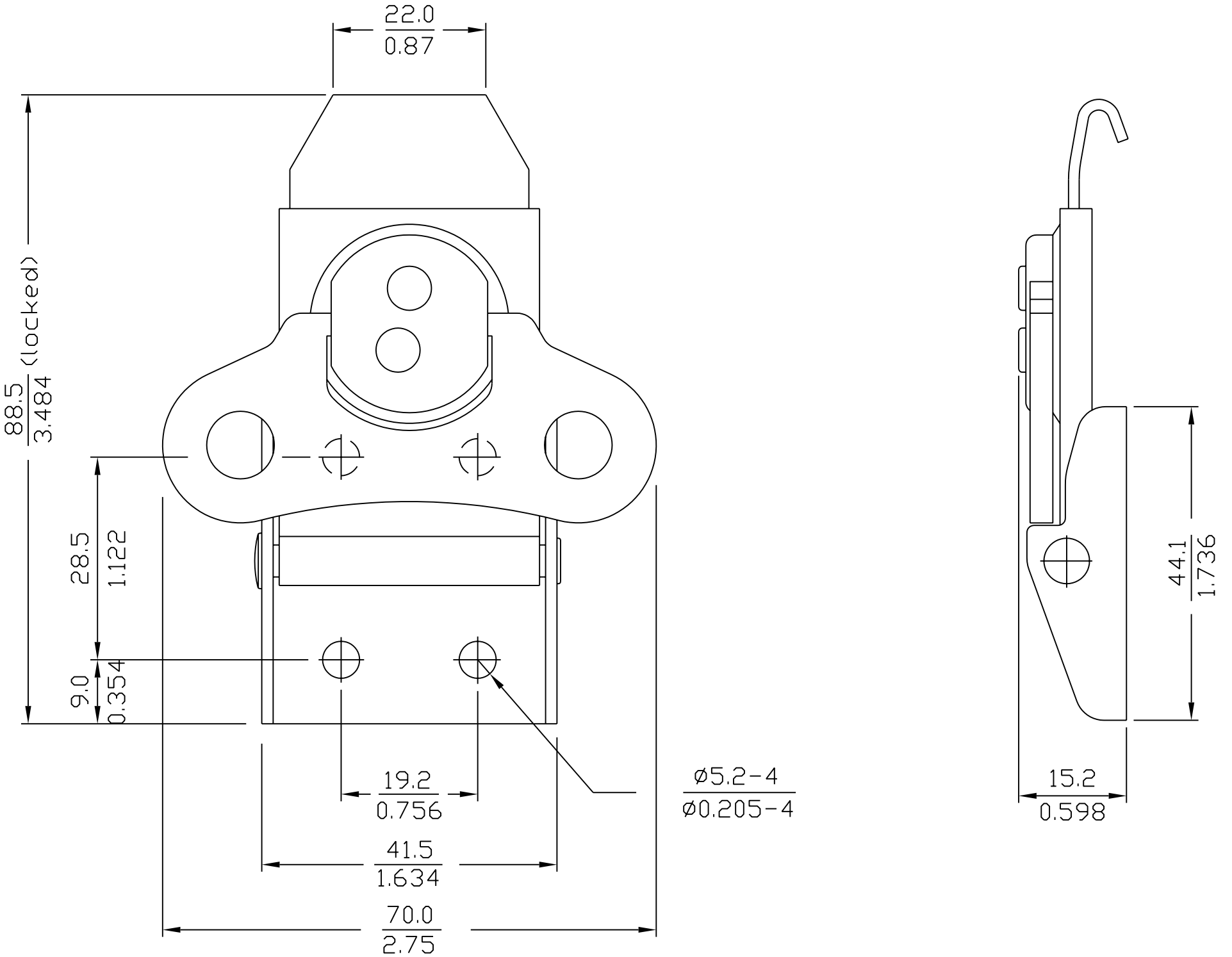
22.0
0.87
88.5
3.484
(locked)
28.5
1.122
9.0
0.354
19.2
0.756
41.5
1.634
70.0
2.75
ø5.2-4
ø0.205-4
44.1
1.736
15.2
0.598