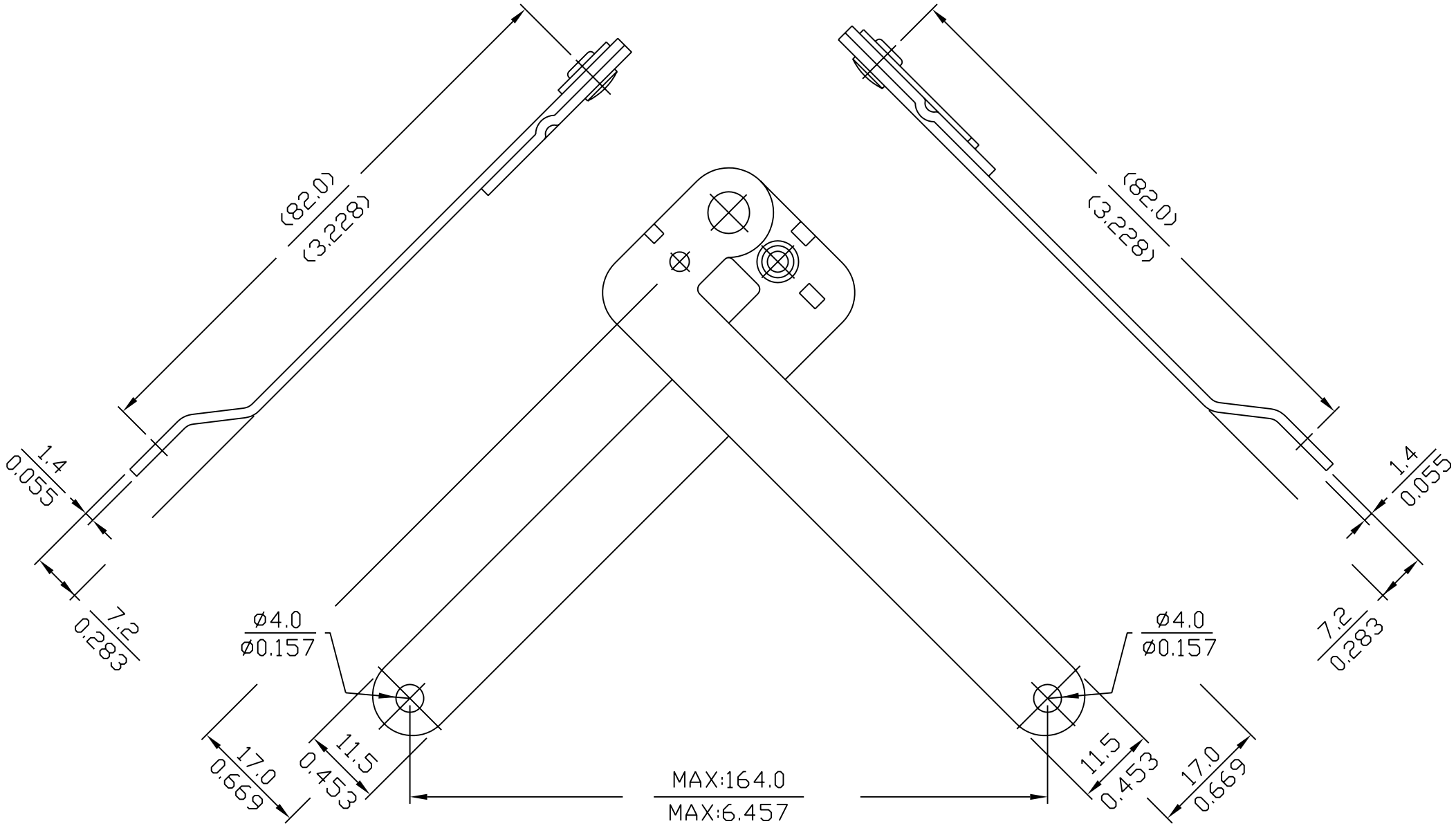
(82.0)
(3.228)
(82.0)
(3.228)
1.4
0.055
1.4
0.055
7.2
0.283
7.2
0.283
Ø4.0
Ø0.157
Ø4.0
Ø0.157
17.0
0.669
11.5
0.453
11.5
0.453
17.0
0.669
MAX:164.0
MAX:6.457